Brambles- Moura Site

Truck Run / Dump Circuit

Orlaco Camera Viewing System

Technical Data

Site / Operation

- Operates 5 x Road Trains on this site each consisting of a single Prime Mover with 6 x Trailers (1 x Power Trailer).
- Operation is Bulk Haulage of Coal from Mine site 25 Kilometres to Unloading Point.

Environment

- Extremes of heat and cold from -5degC to +46 degC ambient.
- Open operating conditions means extremes of weather, as well as conductive heat.
- Coal dust / dirt / abrasive environment (wind).
- Coal is very acidic- sulphur compound- very corrosive environment.
- Stainless Steel or Coated materials must be used for all equipment.

Camera- Technical Requirements

Camera Technical Requirements

- All components need to be resistant with long service life in the existing operating conditions and type of machinery.
- Camera with better viewing capability on LCD and to be in Colour.
- Lens should be resistant against mild acidic solutions as experienced in Coal Industry environments.
- Driver must be see LCD Image on approach to the Unloading Bin and also after the last Trailer has cleared the Bins.
- Transmitters must operate without interfering with existing site frequencies utlised and In-cabin communications.
- Camera Sunlight Glare resistance- during Sunset / Sun- up.
- Overall durability and long service life.

Moura Dump Circuit- Camera / Circular Transmitter Location

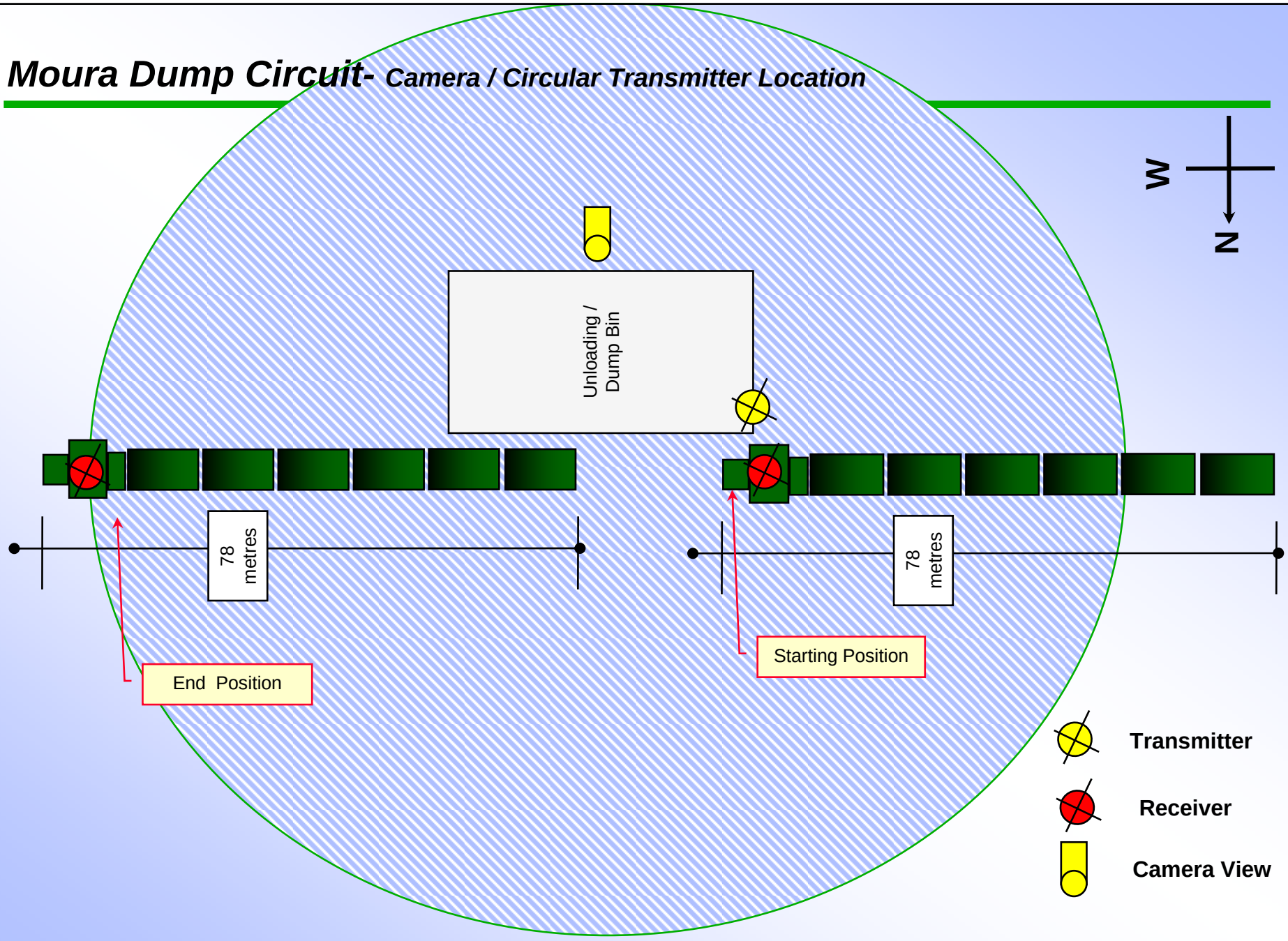

Operating Requirements

Primary Camera operational- enhanced Driver viewing for:

- Alignment of Trailers to the Bin- Concave ROM- Drive looses view due to length and concave ROM.
- Elimination of potential hydraulic damage and spillage.
- Ensure that Trailer Side Tipper Bin is empty.
- View Bin Hopper to ensure that overfilling does not occur- Conveyor stoppage can occur.
- Increased Driver awareness and reduction in fatigue.
- Provide overall safety by enhanced viewing conditions.

Camera Viewing System Solution

Camera / Transmitter Location

- The location of the Camera and Transmitter could be mounted on existing light poles or structures at the rail siding / dump area.
- Alternatively, additional mounting poles will be required to be installed.
- Location of Power Supply to Camera and Transmitter should not be more than 80 metres apart.
- Heavy Duty Cable is used- allowing for 160 metres in total for Camera and Transmitter) with waterproof connectors.
- Transmitter is pressurised to 0.4 bar with Nitrogen- Water- proof to 25 metres.
- RF signal is on MHz 2.8 free- to- air frequency.

Moura Dump Circuit- Camera / Circular Transmitter Location- Existing

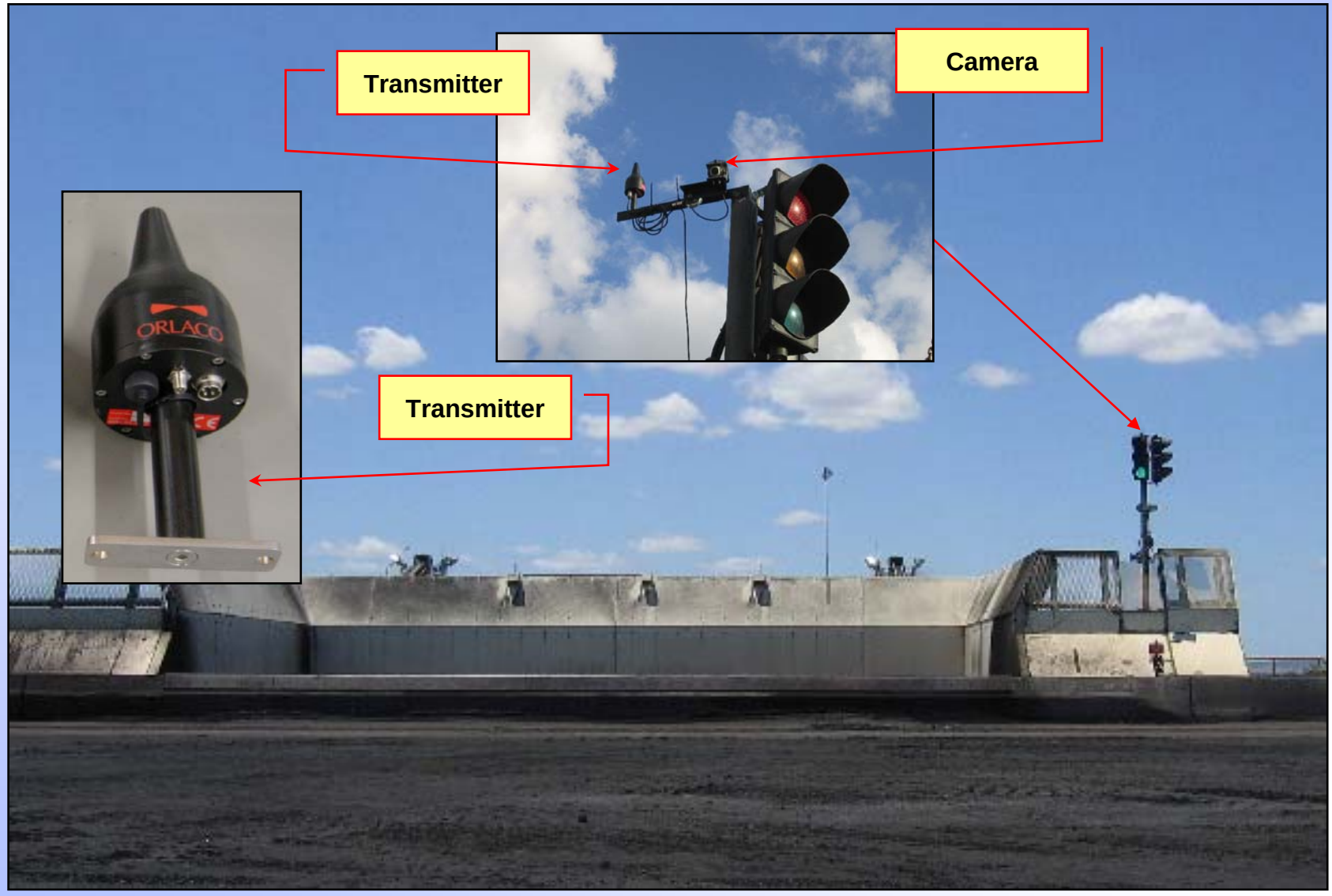

Camera Viewing System Solution

Camera Type

- Viewing Camera was CCC115 to provided maximum view (wide angle) of Bin / Hopper and Trailer.
- CC Camera is pressurised to 0.4 bar with Nitrogen- Water- proof to 25 metres- casing is Stainless Steel.
- Lens is chemical hardened, resistant to most chemicals, heated at 15 degC and of a special SLR (Sunlight Resistant) Material to reduce glare in extreme / direct light conditions.
- CC Camera is supplied with a special stainless steel bracket with integrated washer nozzle which can be used with air or water to clean the lens of the camera- if and when required.

Moura Dump Circuit- Camera

Adjust Camera View by loosening the two bracket screws with Allen Key and rotating the camera until optimum view is attained

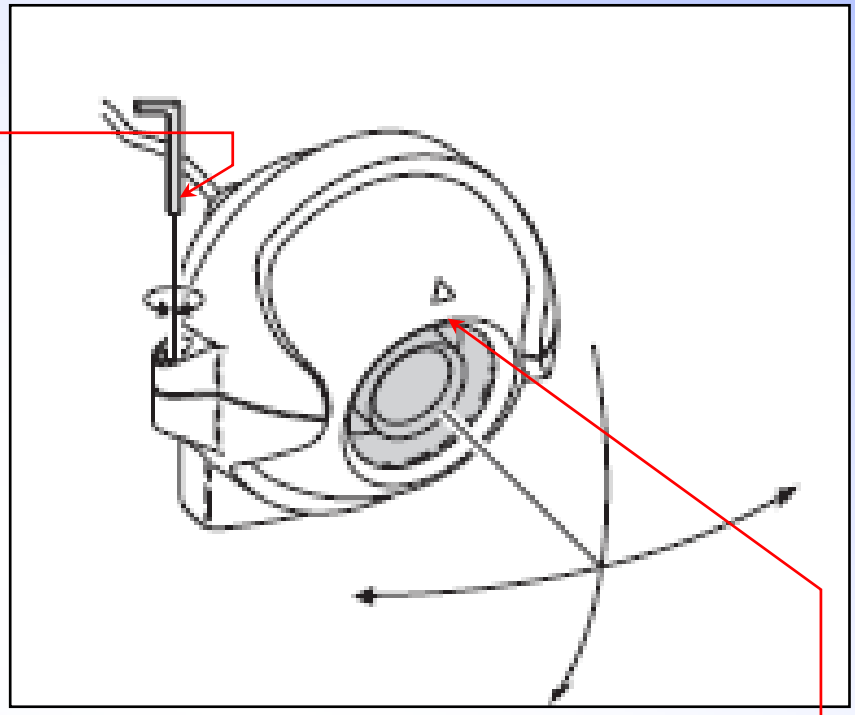

CCC Camera / Stainless Steel with Washer Bracket

Always keep Arrow in Camera Lens to the vertical

Moura Dump Circuit- Truck Receiver

Receiver location: This edge to face backwards and to be above the Trailer Height for clear reception of RF signal

RF Receiver

Moura Dump Circuit- Camera / Circular Transmitter Location- Existing

Camera Viewing System Solution

Vehicle / Truck Components

- RF Receiver is to be mounted externally / unobstructed to the Truck.
- Receiver bracket has been redesigned to be more durable, especially when subject to vibration.
- LCD is to be mounted on dash of Truck within 900 mm of Drivers View.
- Cables are heavy duty with waterproof connectors.
- Receiver is pressurised to 0.4 bar with Nitrogen- Water- proof to 25 metres- casing is Stainless Steel.
- LCD is 7” complete viewing in full crisp colour.
- Multifunctional capability such as auto- switching of upto three cameras, light weight and "thin" design, Mirror and Invert of Images, each camera can have independent settings for contrast, brightness, etc.
- Switching function can be initiated manually for each camera / position, line marking on screen, extreme shock resistance, has an IP54 rating and much more.
- The Compact LCD is light weight (1.2kg) and slim line (25 mm thick). This makes mounting of the LCD easy and flexible in any location. Also as the LCD is compact, robust and light weight it will not vibrate from its mounts nor obscure the Operators view.

Camera Viewing System Solution

Power Supply

- Circular Transmitter and Power supply (220 volt / 12 volt) is to be a maximum of 80 metres.
- Power Supply conforms to IP64, has solid state circuitry and is contained in a Stainless Steel Housing with waterproof connectors.
- Power Supply is located for easy access and in shaded / protected location.

Moura Dump Circuit- Power Supply Location

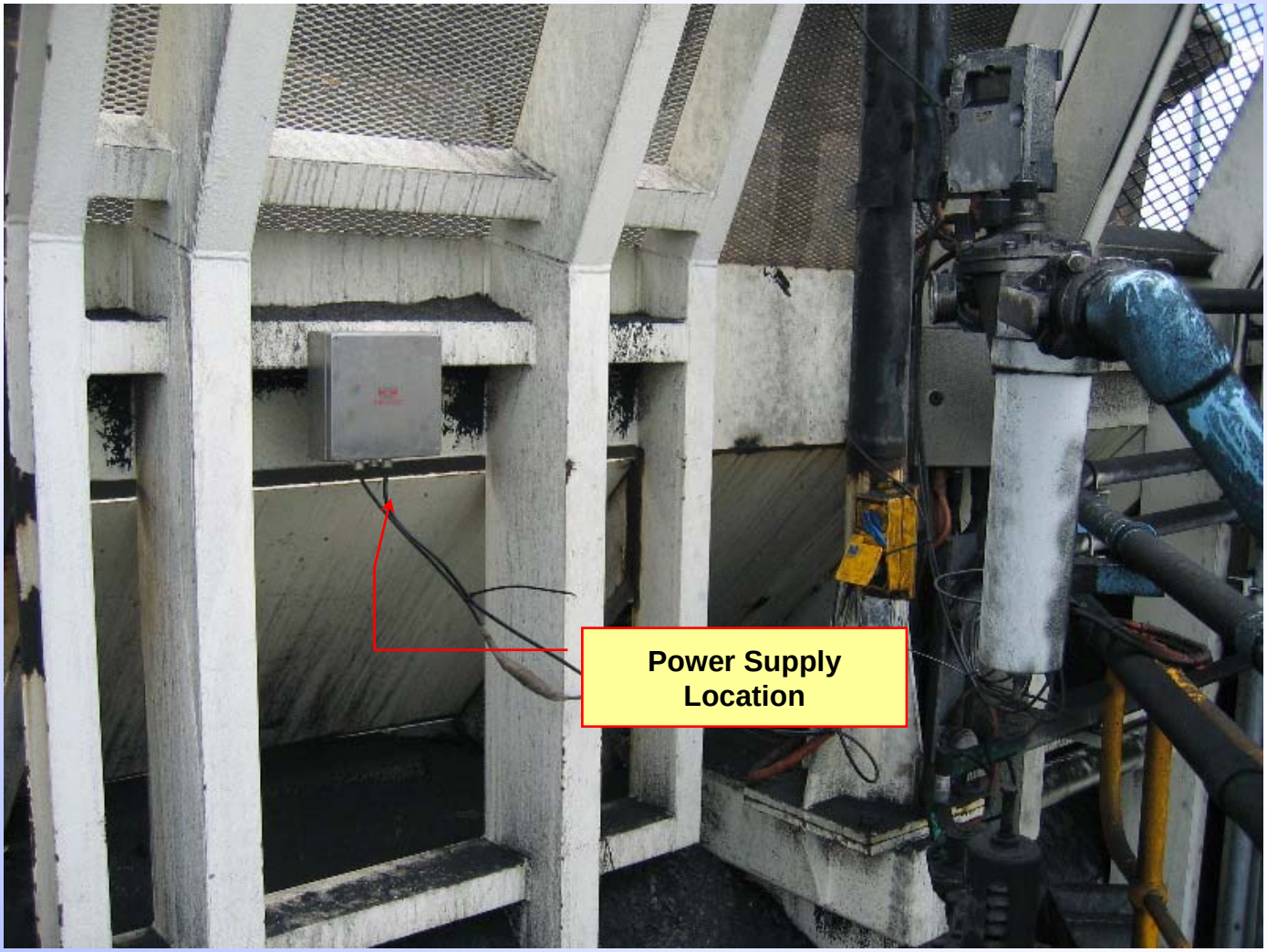

Camera Viewing System Solution

Vehicle / Truck Components

- RF Receiver is to be mounted externally / unobstructed to the Truck.
- Receiver bracket has been redesigned to be more durable, especially when subject to vibration.
- LCD is to be mounted on dash of Truck within 900 mm of Drivers View.
- Cables are heavy duty with waterproof connectors.
- Receiver is pressurised to 0.4 bar with Nitrogen- Water- proof to 25 metres- casing is Stainless Steel.
- LCD is 7” complete viewing in full crisp colour.
- Multifunctional capability such as auto- switching of upto three cameras, light weight and "thin" design, Mirror and Invert of Images, each camera can have independent settings for contrast, brightness, etc.
- Switching function can be initiated manually for each camera / position, line marking on screen, extreme shock resistance, has an IP54 rating and much more.
- The Compact LCD is light weight (1.2kg) and slim line (25 mm thick). This makes mounting of the LCD easy and flexible in any location. Also as the LCD is compact, robust and light weight it will not vibrate from its mounts nor obscure the Operators view.

Summary / Conclusion to Date

- RF Receiver bracket failed due to extreme vibration. Within in two weeks a new / heavy duty bracket was manufactured and has operated with out incident since.
- Image is clear and provides complete / crisp view as required.
- Coal dust does not adhere to Camera Lens- images remains clear.
- Mineralisation can build- up on Camera Lens from Water Sprays used for Dust Suppression- however clean water Spay Nozzle in bracket can be used to clean or relocation of the camera to avoid this situation.
- FR Camera System evaluation has been in operation for more than 4 months with no failures occurring since.
- Supplier provides 3 year warranties for the entire system.

LSM

LUBRICATION
SAFETY
MAINTENANCE

Welcome- Our Company is focused on three primary disciplines to assist you with maintaining your equipment, increasing workplace safety, extending component service life and increasing productivity:

Lubrication+ Safety+ Maintenance

This web site has been designed to not only provide you with details on our specialised industrial products but also as a technical resource for training and education. We will endeavour to continually improve and add information to our site but should you have a suggestion for additional information or how we can improve our site to assist further, then please do not hesitate to Contact Us for our Offices / Distributors or Meet our Team to send an email directly.

LUBRICATION

VOGEL — Automatic Centralised Lubrication Systems for all applications and industries

MATO — Quality Workshop/ Dispensing / Fluid Transfer Equipment

LUBEFLO — Quality Workshop/ Dispensing / Fluid Transfer Equipment

COXREELS — Reels for light & heavy industries

IR ARO — Quality Workshop/ Dispensing / Fluid Transfer Equipment

SAFETY

ORLACO — Industrial strength Safety Viewing & Monitoring Camera Systems

MAINTENANCE

DES-CASE — Disposable Desiccant Breathers for virtually all types of industrial equipment

HY-PRO — High Quality Filters for any application

TECHNICAL SERVICES/SUPPORT

- Automatic Lubrication System Design
- Workshops / Lubrication Vehicles- Fluid Management Systems
- Lubrication Audits- Service- Repair
- Asset Management with Historical Reporting
- Services 24/7 days
- Lubrication Education & Training